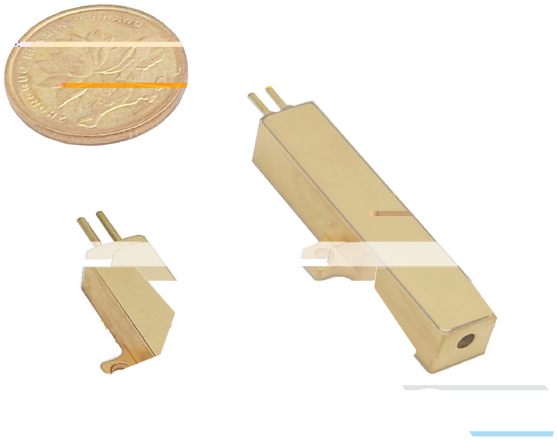

波长（nm）			
μ			

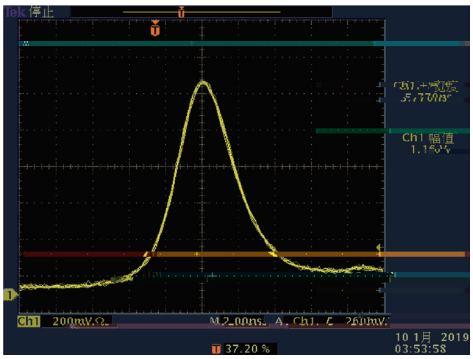
Tek 停止
Ch1 200mV Ω
M 2.00ns A Ch1 260mV
37.20 %
10 1月 2019
03:53:58

Edit Sequence Processing Calibration Measurement Extras View Window Help

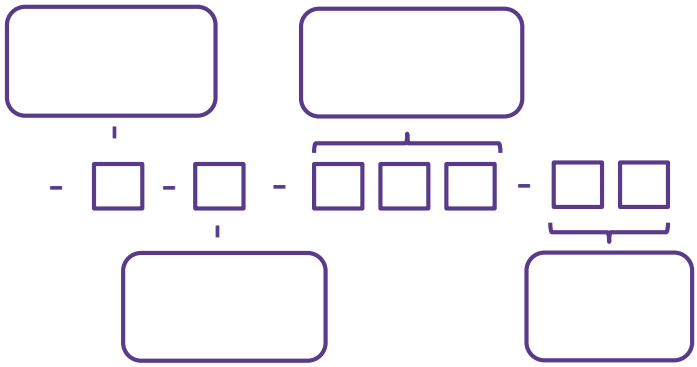

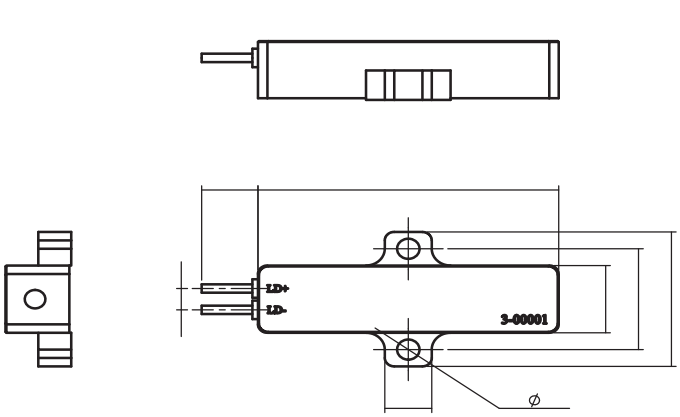
LD+
LD-
3-00001
Ø

VISIBLE AND/OR INVISIBLE
LASER RADIATION
CLASS 1
LASER PRODUCT
CLASSFIED PER IEC 60825-1:2014